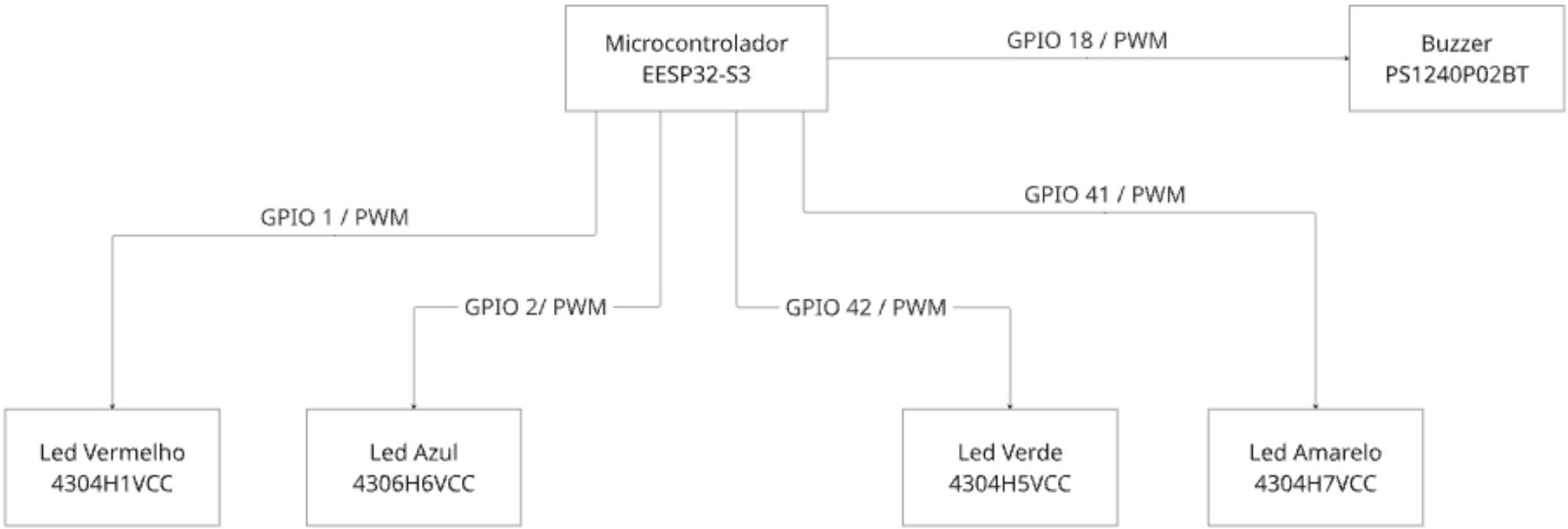
Microcontrolador
EESP32-S3
GPIO 18 / PWM
Buzzer
PS1240P02BT
GPIO 41 / PWM
GPIO 1 / PWM
GPIO 2/ PWM
GPIO 42 / PWM
Led Vermelho
4304H1VCC
Led Azul
4306H6VCC
Led Verde
4304H5VCC
Led Amarelo
4304H7VCC

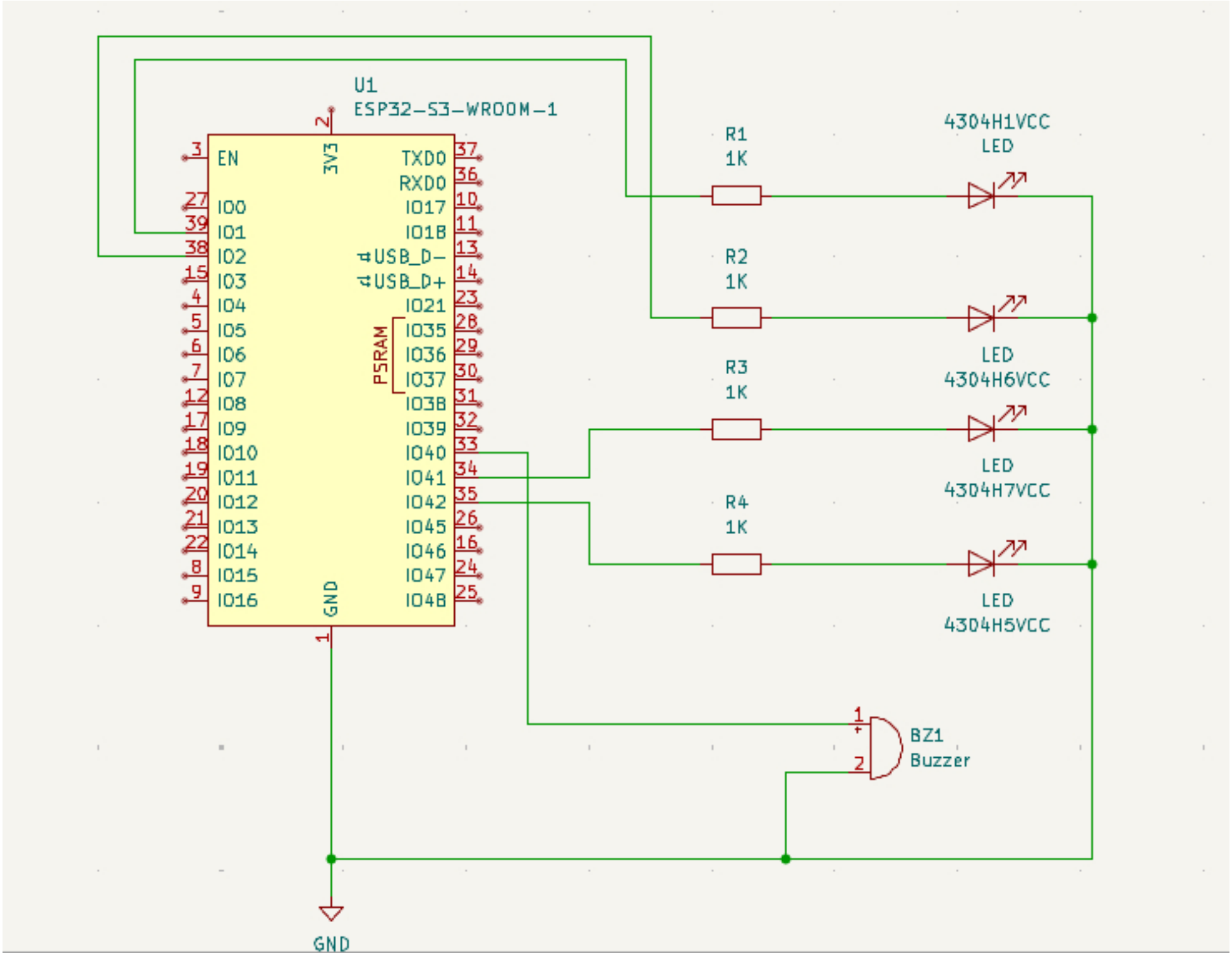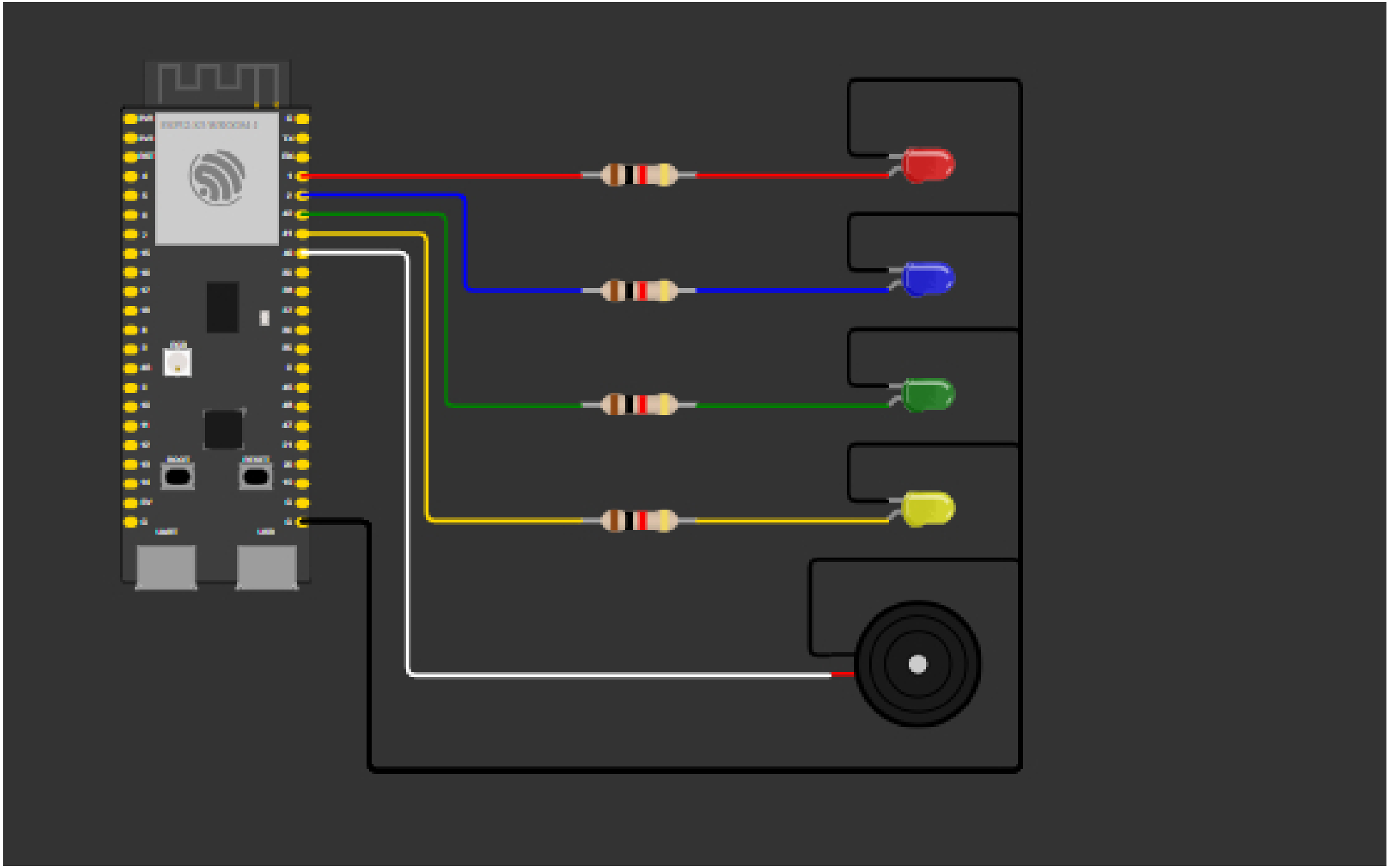
U1
ESP32-S3-WROOM-1
EN
3V3
GND
IO0
IO1
IO2
IO3
IO4
IO5
IO6
IO7
IO8
IO9
IO10
IO11
IO12
IO13
IO14
IO15
IO16
TXD0
RXD0
IO17
IO18
USB_D-
USB_D+
IO21
IO35
IO36
IO37
IO38
IO39
IO40
IO41
IO42
IO45
IO46
IO47
IO48
PSRAM
R1
1K
R2
1K
R3
1K
R4
1K
4304H1VCC
LED
LED
4304H6VCC
LED
4304H7VCC
LED
4304H5VCC
BZ1
Buzzer
GND